Application Hint 37p

Low Light-Load Quiescent Current Supply

by Martin Galinski

The Infinite Bandwidth Company™

Circuit Performance

- MIC5205 on-state quiescent = 560µA
- MIC4680 turns on at 65mA load current
- MIC4680 turns off at 10mA load current

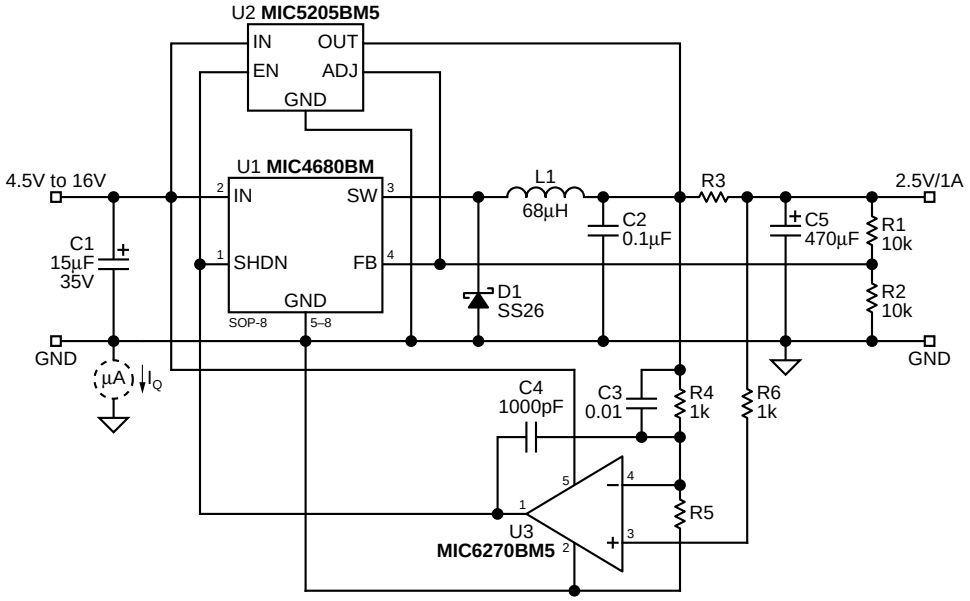

Bill of Material

Reference	Part Number	Manufacturer	Description	Qty
C1	TPSD156M035R0300	AVX	15µF 35V	1
C2	08055C104KAT2	AVX	0.1µF, ceramic	1
C3	08055C103KAT2	AVX	0.01µF, ceramic	1
C4	08055C102KAT2	AVX	1000pF, ceramic	1
C5	TPSD477M010R0100	AVX	470µF 10V	1
D1	B260A SS26	Vishay-Lite On(Note 1) GI	2A, Schotty diode	1
L1	UP2-680	Coiltronics	68µH	1
R1, R2	CRCW08051002FRT1	Vishay-Dale(Note 2)	10k ±1%	2
R3	WLS-2010-R200-F	Vishay-Dale(Note 2)	200mΩ ±1%	1
R4, R6	CRCW08051001FRT1	Vishay-Dale(Note 2)	1k ±1%	2
R5	CRCW08052003FRT1	Vishay-Dale(Note 2)	200k ±1%	1
U1	MIC4680BM	Micrel Semiconductor	1A 200kHz power-SO-8 buck regulator	1
U2	MIC5205BM5	Micrel Semiconductor	150mA low-noise LDO regulator	1
U3	MIC6270BM5	Micrel Semiconductor	IttyBitty™ comparator	1

Note 1: Vishay-Lite On, Inc. (805) 446-4800

Note 2: Vishay-Dale (402) 371-0080
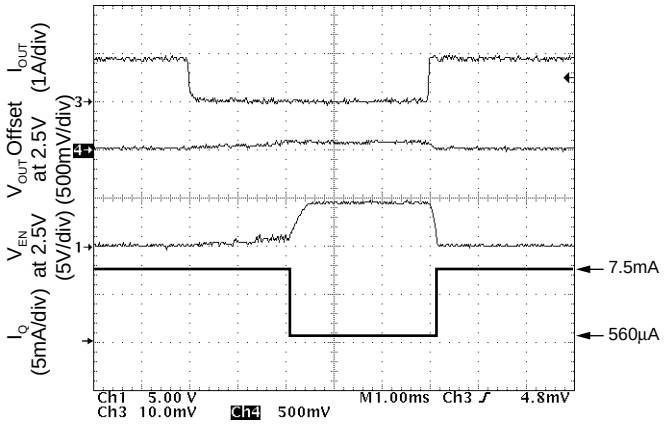
Low Light-Load Quiescent Current
Supply Circuit Performance